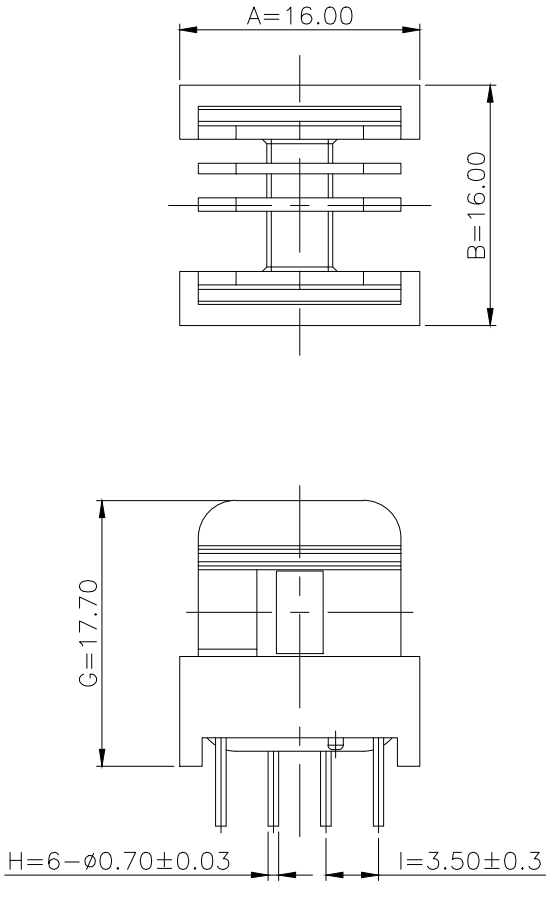

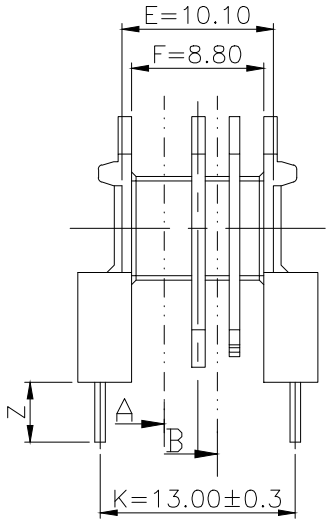

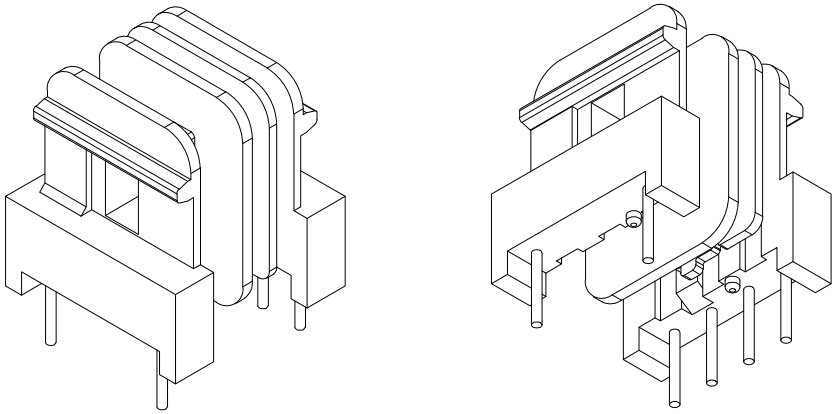

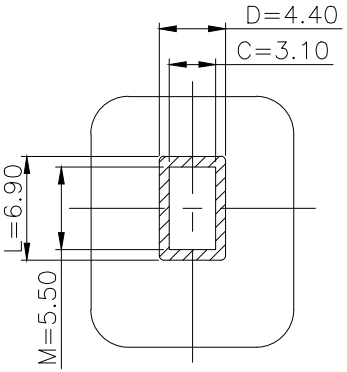

SECTION "A"

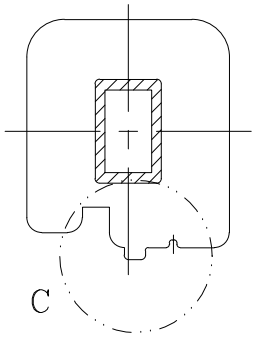

SECTION "B"

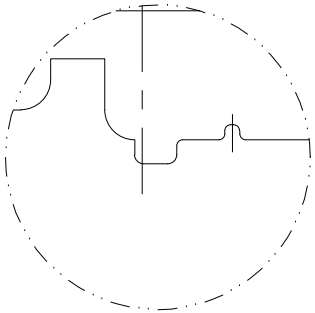

DETAIL "C"
SCALE 2:1

MARK	REVISION NOTE	DATE	DRAWN	CHECKED	APPROVED
4					
3					
2					
1					

DRAWN	CHECKED	APPROVED	MATERIAL : PHENOL	UL REC. : UL94V-0	THIRD ANGLE PROJ.	SCALE : 1/1
			Z : PIN LENGTH (According to customer's request)	DATE : 2008.11.24	TOLERANCE :±0.2 (Unless otherwise specified)	UNIT : m/m
주식회사 대흥보빈 DAE HEUNG BOBBIN CO., LTD			TITLE UU 11*16 "H" (6P) 3F		DWG NO DH-081117-1005-02	